IT5602L
Triple Channel
Linear Encoder Kit

Product data

Features

- Highly miniaturized encoder
- Differential inductive sensing principle
- Insensitive to magnetic interference fields
- Robust against oil, water, dust, particles
- Ultra-thin encoder and scale (total < 2 mm)
- Optional with cable, connector and holder

Applications

- Linear actuators
- Industrial / laboratory / office automation
- X-Y stages
- Pick & Place assembly equipment
- High-speed motion control
- Mechatronics applications

Key Specifications

Output format.....A and B in quadrature + Index
Resolution.....down to 0.02 µm
Maximum speed .....up to 36 m/s
Airgap .....up to 0.6 mm
Supply.....5 V, 25 mA
Temperature .....-20 to 100°C

Description

The IT5602L incremental encoder kit consists of an encoder and a linear scale (Fig. 1). The encoder consists of two integrated circuits in a PCB housing. It provides incremental A and B output signals in quadrature and an Index signal, which is synchronous to A and B (Fig. 2). The linear scale is a PCB with passive copper strips.

Resolution, maximum speed and airgap
The resolution and the maximum speed of the encoder are user-programmable or can be programmed ex-factory. The resolution depends on a filter setting that limits the maximum speed of the encoder vs. the scale. The resolution also depends on the maximum distance between the encoder and the scale. Tables 2 and 3 allow the configuration of resolution and maximum speed for a certain maximum air-gap.

Scales
Scales with different lengths (Fig. 4) are selected in Table 5. Each scale has a backside adhesive layer and may be mounted on any substrate, using a 0.1 - 0.2 mm high alignment edge for correct positioning in front of the encoder.

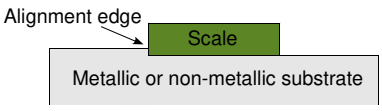

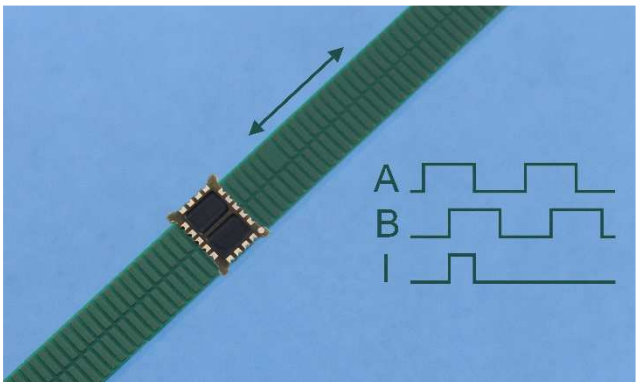

Encoder assembly
The encoder can be assembled by reflow soldering on a rigid or flexible PCB. Optimum performances are obtained by following the recommended schematic (Fig. 5) and footprint (Fig. 6). In particular, there should be no copper traces or metal objects behind the encoder up to a distance of 3 mm in order to avoid any influence on the measured position. If this is not possible, a blank copper layer behind the encoder (rear-side of the PCB) may be envisaged and/or a linearization using the on-chip look-up table (LUT).

Encoder holder
The encoder holder **type A** is available (Fig. 7) and can be selected in Table 6. It includes the encoder and the external components according to the recommended schematic (Fig. 5). The encoder holder can be mounted on any substrate using 4 screw holes.

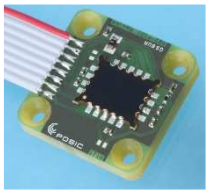

Encoder cable and connector
The encoder on holder can be supplied with a flat cable of pitch 1.27 mm and a connector (Fig. 7). The cable length and the connector type are selected in Tables 7 and 8.

Encoder programming
The Evaluation and Programming Tool (EPT) including an interface board and the ASSIST software is available for the linearization and programming of the encoder.

3D models of encoder, holder and scales
STEP models are available on www.posic.com.

Specifications

Recommended Operating Conditions

Parameter	Symbol	Remark	Min	Typ	Max	Unit
Supply voltage	VDD		4.5	5.0	5.5	V
Operating Temperature	T_A		-20		100	°C
Airgap	Z		0.1	0.3	0.6	mm
Lateral tolerance	ΔY				0.1	mm
Airgap tolerance	ΔZ				0.1	mm

Electrical Characteristics

Electrical characteristics over recommended operating conditions, typical values at VDD = 5.0 V, T_A = 25°C.

Parameter	Symbol	Remark	Min	Typ	Max	Unit
Supply current	IDD	No load	16	25	37	mA
Maximum frequency A/B signals	$F_{A/B}$		0.9	1.2	1.5	MHz
High level output voltage	V_{OH}	I_L = 2 mA	VDD–0.5			V
Low level output voltage	V_{OL}	I_L = 2 mA			0.5	V
Rise time, fall time	t_r, t_f	C_L = 47 pF			20	ns

If A is pulled up and B pulled down during power-up, the encoder enters into a test mode with a 65 kHz square wave on all outputs.

Encoding Characteristics

Encoding characteristics over recommended operating conditions, typical values at VDD = 5.0 V, T_A = 25°C, airgap = 0.2 mm, speed = 10 mm/s.

Parameter	Symbol	Remark	Min	Typ	Max	Unit
Pulse width error	ΔP	Nominal value 180°e		10	50	°e
State width error	ΔS	Nominal value 90°e		10	60	°e
Phase shift error	ΔΦ	Nominal value 90°e		10	45	°e

Linearity

The encoder contains a LUT (LookUp Table) to compensate the periodic non-linearity, which depends on the period-length of the scale, the airgap and the mechanical tolerances. Table 4 allows you to select a standard LUT for POSIC's standard scales, leading to a non-linearity of about +/- 20 µm. Linearization against an accurate reference encoder allows you to reduce the non-linearity to about +/- 10 µm or even better. The LUT can be programmed in volatile or in non-volatile memory by means of the Evaluation and Programming Tool (EPT) or it can be pre-programmed ex-factory. More info on linearization in the EPT User Manual.

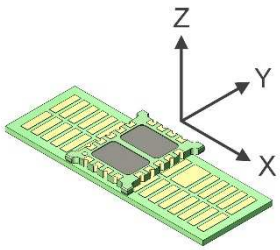

Fig. 1 Coordinate system XYZ.

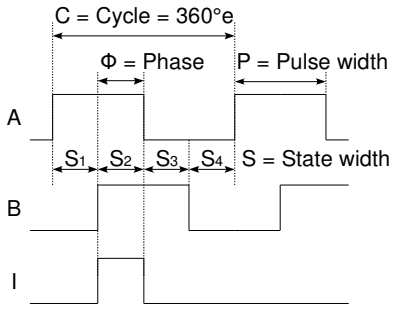

Fig. 2 Encoder output signals A and B in quadrature and Index.

Definitions

Airgap	Distance between encoder and scale in Z-direction. See Fig. 1.
Cycle	One A quad B period, see Fig. 2.
CPP	Cycles per scale-period.
°e	Electrical degree (one Cycle is 360°e)
Phase shift Φ	Number of electrical degrees between the center of the high state of channel A and the center of high state of channel B. Nominal 90°e. Fig. 2.
Pulse width P	Number of electrical degrees that an output is high during one cycle. Nominal 180°e. Fig. 2.
State width S	Number of electrical degrees between two neighboring A and B transitions. Nominal value is 90°e. See Fig 2.

Technical drawings

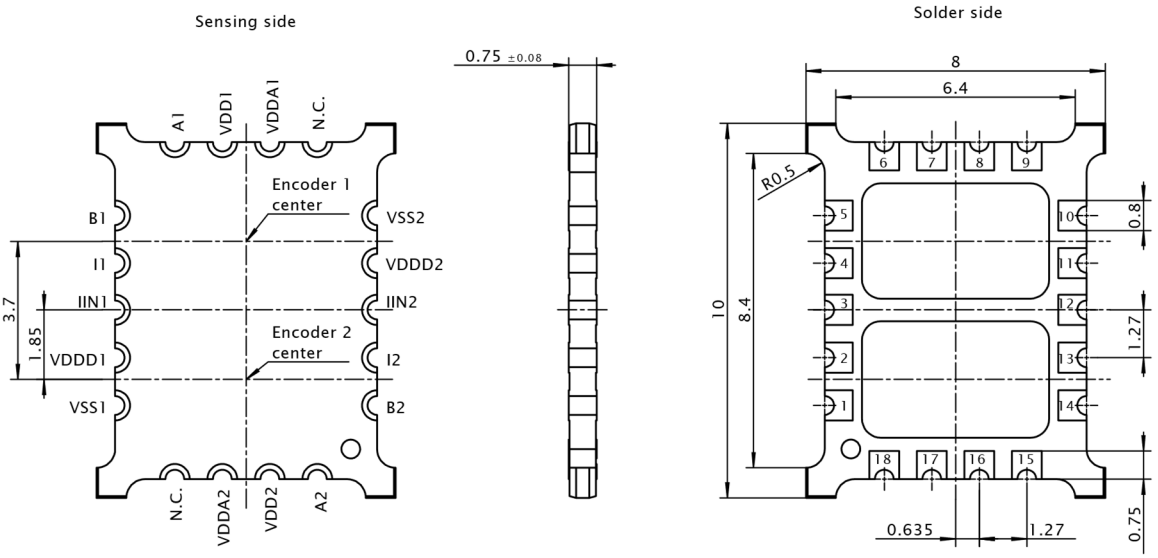

Fig. 3 Dimensions of the IT5602. Encoder 1 center must be aligned to the Index track and Encoder 2 center to the A quad B track (Fig 4).

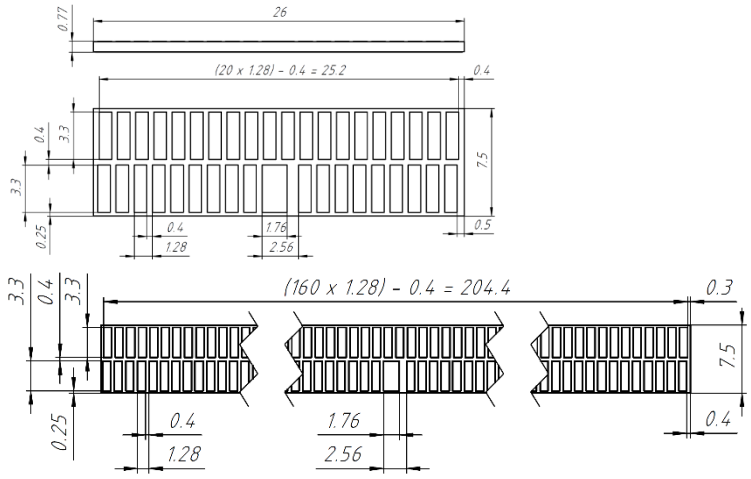

Fig. 4 Scales TPLD04-026 (top and middle) and TPLD05-205 (bottom). All dimensions in mm. Period-length is 1.28 mm, the index-position is in the center. Both scales have backside adhesive. Scale thickness includes adhesive, but not the release liner.

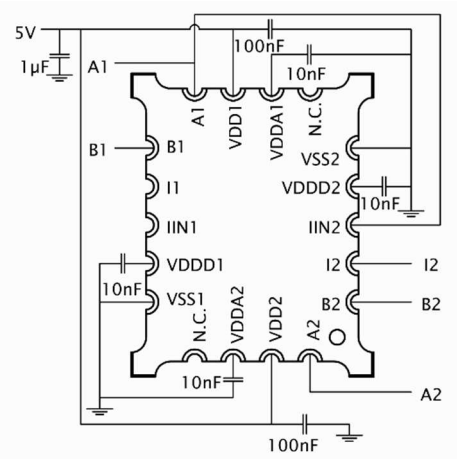

Fig. 5 Recommended schematic. The supply filter capacitor should be 1µF or more. The capacitors 100nF and 10nF should be placed close to the device. Connections A1, B1, A2, B2, I2 are required for programming and linearization.

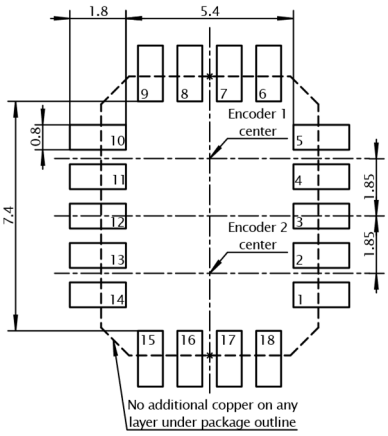

Fig 6 Recommended footprint.

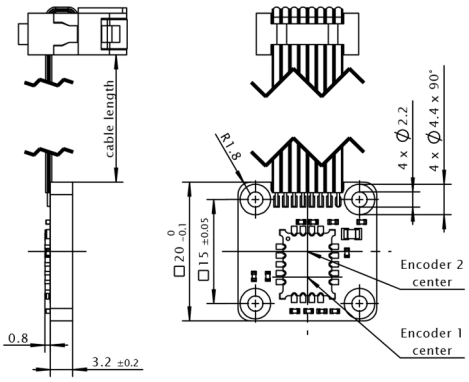

Fig. 7 Dimensions (mm) and connector pin-out of encoder on holder type A with flat cable (pitch 1.27 mm) and 8-pin DIN41651 connector.

Pin	Name	Description
1	VDD	5V Supply
2	VSS	Ground
3	A1	For programming purposes
4	B1	
5	I1	
6	A2	Output A
7	B2	Output B
8	I2	Output I

Ordering information

Ordering code: IT5602L-ABBCCD-EEEEE-F-GGG-HH

A	Orientation	Table 1
BB	Maximum speed	Table 2
CC	Resolution	Table 3
D	Look-Up Table	Table 4
EEEEE	Linear scale	Table 5
F	Encoder holder	Table 6
GGG	Cable	Table 7
HH	Connector	Table 8

Table 1: Orientation. Arrows indicate direction of movement of the scale with rising edge A prior to B.

A	Orientation
0	Not progr.
3	0°

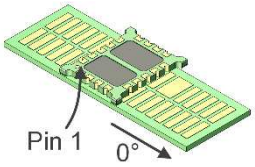

Table 2: Maximum speed

BB	Max speed (m/s)	Max value CC	Time-constant (ms)
00	Not programmed		
01	0.018	16	26
02	0.035	16	13
03	0.071	16	6.4
04	0.14	15	3.2
05	0.28	14	1.6
06	0.57	13	0.8
07	1.1	12	0.4
08	2.3	11	0.2
09	4.5	10	0.1
21	9	09	0 at constant speed
22	18	08	
23	36	07	

Lower Max speed leads to a lower jitter of the A/B outputs.

Table 3: Resolution

CC	Resolution		Maximum value BB	Maximum Airgap* (mm)
	Cycles per Period	µm		
00	Not programmed			
04	4	80	23	0.6
05	8	40	23	0.6
06	16	20	23	0.6
07	32	10	23	0.6
08	64	5	22	0.5
09	128	2.5	21	0.5
10	256	1.25	09	0.4
11	512	0.63	08	0.4
12	1’024	0.31	07	0.3
13	2’048	0.16	06	0.3
14	4’096	0.078	05	0.2
15	8’192	0.039	04	0.2
16	16’384	0.020	03	0.2

* Recommended airgap = 0.2 mm. Sequence of A and B transitions is correct up to Maximum Airgap, but encoding specifications may be out of range.

Table 4: Look-Up Table (LUT)

D	Look-Up Table programmed in OTP	
	LUT Type	Airgap
0	Not programmed	
1	Standard LUT for scales TPLD04 and TPLD05, period-length 1.28 mm	~0.3 mm
2		~0.1 mm
3		~0.5 mm
8	Custom LUT, to be specified	
9	Default LUT, no scale specified	

Table 5: Linear scale (see Fig. 4)

EEEEE	Scale	Dimensions
00000	No scale	
04026	TPLD04	L x W x T = 26 x 7.5 x 0.77 mm
05205	TPLD05	L x W x T = 205 x 7.5 x 0.77 mm

The scale is a PCB made of FR4 and can be cut to length.

Table 6: Encoder holder

F	Encoder holder
0	No holder
A	Holder A (Fig. 7)

Table 7: Cable

GGG	Cable
000	No cable
0xx	Flat ribbon cable, -20 to 100°C, length xx cm
1xx	Flat ribbon cable, -40 to 125°C, length xx cm

Table 8: Connector

HH	Connector*
00	No connector
04	8-pin connector DIN 41651 (Fig. 7)

* Connector temperature range -20 to 100°C

© Copyright 2024 POSIC. All rights reserved. No part of this document may be reproduced without the prior written consent of POSIC. Products and companies mentioned in this document may be trademarks or registered trademarks of their respective owners. Information in this document is believed to be accurate and reliable and may be changed without notice. No responsibility is assumed by POSIC for its use, nor for infringements of patents or other rights of third parties which may result from its use. Some commercial or geographical restrictions may apply to the sale of this product. No license is granted by implication or otherwise under any patent or patent rights of POSIC. In no event shall POSIC, its employees, its contractors, or the authors of this document be liable for special, direct, indirect, or consequential damage, losses, costs, charges, claims, demands, claim for lost profits, fees, or expenses of any nature or kind. POSIC products are not designed, intended, authorized or warranted to be suitable for use in life-support applications, devices or systems or other critical care applications. Inclusion of POSIC products in such applications is understood to be undertaken solely at the customer’s own risk. Should a customer purchase or use POSIC products for any such unauthorized application, the customer shall indemnify and hold POSIC and its officers, employees, subsidiaries, affiliates, representatives and distributors harmless against all claims, costs, damages and attorney fees which could arise.